PRELIMINARY ISSUE

Work Order ID 64214

Tuesday, November 30, 2010 1:07:53 PM

PRELIMINARY ISSUE

Item ID: D4151-041 **Accept** **Setup Start** **Stop**

Revision ID:

Item Name: Basket Fwd Hardpoint Assembly, Lower

Start Date: 11/30/2010 **Start Qty:** 2.00 **Cust Item ID:**

Required Date: 11/30/2010 **Req'd Qty:** 2.00 **Customer:**

POSITIVE RECALL

Reference:

Approvals: **Process Plan:** MK **Date:** 10-11-30 **Tooling:** _____ **Date:** _____ **Run Start** **Stop**

QC: _____ **Date:** _____ **SPC (Y/N):** _____ **Date:** _____

Sequence ID/ Work Center ID	Operation Description	Set Up/ Run Hours	Tool ID	Tool #	Plan Code	Accept Qty	Reject Qty	Reject Number	Insp. Stamp
Draw Nbr / **Revision Nbr**									
D4151 / ~~B~~ C									
100	PDI MP 10/11/30	0.00							
Small Fab									
Small Fab	**Memo** PULL FROM STOCK D4151-041 X 2 DISSASSEMBLE AND DISCARD HARDWARE DRILL HOLES TO 0.250 ON THE STUD AND ON THE PLATES AS PER ATTACHED DRAWING	0.00				10/11/30			
110	QC5- Inspect part completeness to step on W/O	0.00 - inspected to hand changes on PDI Day. 10/11/30							
QC									
Quality Control	**Memo**	0.00							

Dart Aerospace Ltd

W/O:		WORK ORDER CHANGES						
DATE	STEP	PROCEDURE CHANGE	By	Date	Qty	Approval Chief Eng / Prod Mgr	Approval QC Inspector
		4 x AN4C13A B 114615. 8 x NAS1149C0432R-B114742. 4 x MS21043-4- B 116188. } Pick only	MF 10-11-30	10-11-30			8 10/11/30 As per Hand chap on PD1

Part No: _____ PAR #: _____ Fault Category: _____ NCR: Yes No DQA: _____ Date: _____

Resolution: _____ Disposition: _____ QA: N/C Closed: _____ Date: _____

NCR:		WORK ORDER NON-CONFORMANCE (NCR)						
DATE	STEP	Description of NC Section A	Corrective Action Section B			Verification Section C	Approval Chief Eng	Approval QC Inspector
			Initial Chief Eng	Action Description Chief Eng	Sign & Date			

NOTE: Date & initial all entries

H:\FORMS\Quality Assurance\approved QA\NCRWO RevE

Work Order ID 64214

Tuesday, November 30, 2010 1:07:53 PM

Item ID: D4151-041 **Accept** **Setup Start** **Stop**

Revision ID:

Item Name: Basket Fwd Hardpoint Assembly, Lower

Start Date: 11/30/2010 **Start Qty:** 2.00 **Cust Item ID:**

Required Date: 11/30/2010 **Req'd Qty:** 2.00 **Customer:**

Reference:

Run Start **Stop**

Approvals: **Process Plan:** _____ **Date:** _____ **Tooling:** _____ **Date:** _____

QC: _____ **Date:** _____ **SPC (Y/N):** _____ **Date:** _____

Sequence ID/ Work Center ID	Operation Description	Set Up/ Run Hours	Tool ID	Tool #	Plan Code	Accept Qty	Reject Qty	Reject Number	Insp. Stamp
120	Identify as per dwg & Stock Location: None	0.00							
Packaging	**Memo** on basket & one ENG	0.00							
Packaging									
130	QC21- Final Inspection - Work Order Release	0.00							
QC	**Memo**	0.00							
Quality Control									

POSITIVE RECALL MF

EFFECTIVE _____ AUTH _____ 10-1201

RELEASED _____ DATE _____

Dart Aerospace Ltd

W/O:		WORK ORDER CHANGES					
DATE	STEP	PROCEDURE CHANGE	By	Date	Qty	Approval Chief Eng / Prod Mgr	Approval QC Inspector

Part No: _____ **PAR #:** _____ **Fault Category:** _____ **NCR:** Yes No **DQA:** _____ **Date:** _____

Resolution: _____ **Disposition:** _____ **QA: N/C Closed:** _____ **Date:** _____

NCR:		WORK ORDER NON-CONFORMANCE (NCR)						
DATE	STEP	Description of NC Section A	Corrective Action Section B			Verification Section C	Approval Chief Eng	Approval QC Inspector
			Initial Chief Eng	Action Description Chief Eng	Sign & Date			

NOTE: Date & initial all entries

H:\fFORMS\Quality Assurance\approved QA\NCRWO RevE

Location/Lot Activity

Tuesday, November 30, 2010 1:08:33 PM

Criteria : All Items All Locations Lot: 60897 All Transaction Types All Dates Report on Locations & Lots

Transaction Type	Item ID/ Item Name	Warehouse / Location ID	Reason	Employee ID / Location Code	Loc Trans Date	LocQtyPrior/ Location Qty	Lot Number	LotQtyPrior/ Lot Qty	Shelf Life Date / Lot Code	Extended Cost
Issue	D4151-041 / Basket Fwd Hardpoint Assembly, Lower	Main Warehouse	63161	DESJ02		4.0000		4.0000		
		ST123			11/1/2010	-1.0000	60897	-1.0000		($31.29)
		Main Warehouse	63925	QUIR01		3.0000		3.0000		
		ST123			11/19/2010	-1.0000	60897	-1.0000		($31.29)
								-2.0000		**($62.59)**
Rework	D4151-041 / Basket Fwd Hardpoint Assembly, Lower	Main Warehouse	64214	FAUT01		2.0000		2.0000		
		ST123			11/30/2010	-2.0000	60897	-2.0000		($62.59)
								-2.0000		**($62.59)**
WIP Receipt	D4151-041 / Basket Fwd Hardpoint Assembly, Lower	Main Warehouse	60897	FAUT01		1.0000		0.0000		
		ST123			9/30/2010	4.0000	60897	4.0000		$125.17
								4.0000		**$125.17**

Dart Aerospace Ltd

W/O:		WORK ORDER CHANGES					
DATE	STEP	PROCEDURE CHANGE	By	Date	Qty	Approval Chief Eng / Prod Mgr	Approval QC Inspector

Part No: _____ PAR #: _____ Fault Category: _____ NCR: Yes No DQA: _____ Date: _____

Resolution: _____ Disposition: _____ QA: N/C Closed: _____ Date: _____

NCR:		WORK ORDER NON-CONFORMANCE (NCR)						
DATE	STEP	Description of NC Section A	Corrective Action Section B			Verification Section C	Approval Chief Eng	Approval QC Inspector
			Initial Chief Eng	Action Description Chief Eng	Sign & Date			

NOTE: Date & initial all entries

H:\fFORMS\Quality Assurance\approved QA\NCRWO RevE

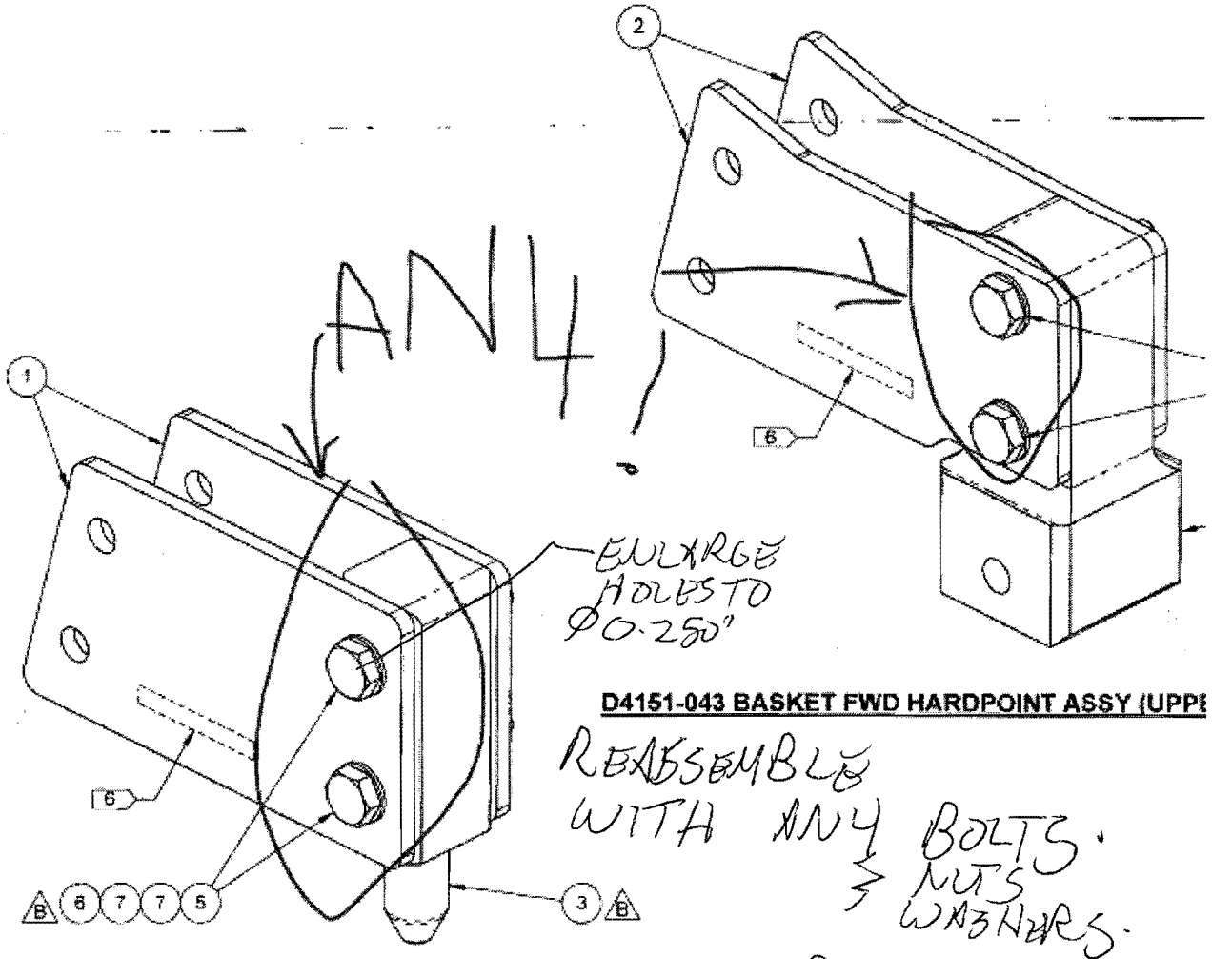

MP 10/11/30

#64214.

PRELIMINARY.

NOTES:
1) MATERIAL: N/A
2) FINISH: NONE
3) TOLERANCES: PER DART QSI 018 UNLESS OTHERWISE NOTED
4) UNITS: INCHES UNLESS OTHERWISE NOTED
5) BREAK SHARP EDGES: 0.005 TO 0.010 MAX
6) IDENTIFICATION: IDENTIFY WITH DART P/N "D4151-04X" USING FINE POINT PERMANENT INK MARKER
7) WEIGHT:
- D4151-041 = 0.84 lbs
- D4151-043 = 1.17 lbs

Dart Aerospace Ltd

W/O:		WORK ORDER CHANGES					
DATE	STEP	PROCEDURE CHANGE	By	Date	Qty	Approval Chief Eng / Prod Mgr	Approval QC Inspector

Part No: _____ **PAR #:** _____ **Fault Category:** _____ **NCR:** Yes No **DQA:** _____ **Date:** _____

Resolution: _____ **Disposition:** _____ **QA: N/C Closed:** _____ **Date:** _____

NCR:		WORK ORDER NON-CONFORMANCE (NCR)						
DATE	STEP	Description of NC Section A	Corrective Action Section B			Verification Section C	Approval Chief Eng	Approval QC Inspector
			Initial Chief Eng	Action Description Chief Eng	Sign & Date			

NOTE: Date & initial all entries

H:\fFORMS\Quality Assurance\approved QA\NCRWO RevE